DEFY ART OF LIVING

USER MANUAL

DTL160
TOP LOADER WASHING MACHINE

Customer Care Line: 086 100 DEFY (3339)
Customer Care email: service@defy.co.za

Part number: 073736 AJ

Laundry
Instruction manual

Contents

Introduction	2
Important safety instructions	3
Preparation	6
Know your washing machine	7
Installation	8
Sorting the laundry	10
Operating the washing machine	12
Main programmes	14
Programme and consumption table	15
Maintenance and cleaning	16
Troubleshooting	18
Error codes	19
Technical specifications	19
Disposing of the old washing machine	19
Customer care	20
Warranty	21

Introduction

Dear Customer,
Your new Defy top loader washing machine was manufactured in a state of the art facility and has passed the strictest quality control procedures.
Please read this manual carefully before using your washing machine for the first time and then store it within easy reach for future reference.
This manual will provide you with information on how to operate and care for your washing machine to gain the maximum benefit from it.
We trust you will enjoy years of trouble free use.

EXPLANATION OF SYMBOLS

Important information

Warning—Hazardous situations

Warning—Electric shock

PLEASE REGISTER YOUR PRODUCT AT

www.defy.co.za

DEFY APPLIANCES (PTY) LTD
P.O.BOX 12004
JACOBS
DURBAN
4026
SOUTH AFRICA

Figures in this manual are schematic and may not match your machine exactly.

General safety

- This washing machine is not intended for use by persons (including children) with reduced physical, sensory or mental capabilities or lack of experience and knowledge unless they have been given supervision or instruction concerning the use of the washing machine by a person responsible for their safety.
- Children should be supervised to ensure that they do not play with the washing machine.
- Never place the washing machine on a carpeted floor. Lack of airflow beneath the machine could cause overheating.
- In case of a malfunction or maintenance work, disconnect the washing machine from the electrical mains immediately. Repairs must only be made by a qualified technician.
- Before washing, check all clothes for loose buttons and tears. Check pockets for coins , pins or other small articles. Close zips and fasteners. Wash small articles inside a pillow case.
- Do not connect the valve to the hot water supply if the product is intended to be connected to the cold water supply only.
- Do not connect the cold water valve to the hot water supply if the product incorporates two valves. The red is for hot water and the blue is for cold water.
- Do not wash clothes stained with or soaked in petrol, thinners, kerosene, vegetable oil or any other flammable liquids. Nor should any of these liquids be added to the wash water as they constitute a fire hazard or there may be a risk of an explosion.
- Only use the machine for washing fabrics. Do not attempt to wash plastic leather or fibreglass. Sort and separate clothes by fabric, colour and degree of dirt.
- Use detergents, softeners and supplements suitable for top loading automatic washing machines only.
- Always unplug the machine from the wall socket when it requires cleaning or service. Only permit qualified persons to repair or install parts in the washer.
- Do not use water which is hotter than 50 degrees Celsius as this may deform plastic parts of the machine. which could result in injury, electric shock or water leakage.
- The water supply and draining hoses must be securely fastened and remain undamaged to prevent water leakage.
- Check the water supply hose connection by turning on the water before washing and ensure there is no water leakage.
- Follow the instructions on the textile tags and on the detergent package.

- Repair procedures must be carried out by an Authorized Service Agent. Repairs carried out by incompetent persons create a user risk: There may be a risk of accidental fire. If the washer operates abnormally, it may cause an injury. Defy shall not be held liable for damages that may arise from procedures carried out by unauthorized persons.
- Do not expose the machine to any type of flame or put cigarettes or any volatile substances on the machine top. The machine may catch fire or the machine may be deformed due to its large number of plastic components.
- Do not install the machine in a bathroom or very humid place. Doing so may cause a malfunction or result in a short circuit and there is a risk of an electric shock.
- Never wash the machine by spreading or pouring water onto it! Do not spray water on to the control panel and back of the machine. There is a risk of an electric shock, and the machine may malfunction.
- Do not wash, rinse or spin water proof fabrics such as sleeping bags, raincoats, car covers etc. Washing these types of materials may lead to injury through abnormal vibration during spinning or damage may result to the washing machine, wall, floor and clothes.

⚠	Warning! Never reach into or put your hands into the wash/spin tub whilst the machine is operating. If you reach into the wash/spin tub serious injury could result. Wait until all motion stops.
⚠	Warning! If the wash/spin tub does not stop within 15 seconds after the washer lid is opened, switch the washer off immediately and call the customer care line on 086 100 3339.
⚠	Warning! The machine must be unplugged during installation, maintenance, cleaning and repairing procedures to avoid the risk of an electric shock.

- Keep hands and feet away from the bottom of the washing machine when it is in use to avoid the risk of injury.
- Do not stand on the washing machine or place weight on the washing machine. Damage to the washing machine may result and there is a risk of personal injury.

- Turn off the water supply at the tap when the washing machine is not in use to minimise the risk of damage that could arise from water leakage. Unplug the washing machine if it is not going to be used for a long period of time.
- Ensure that the water inlet pipe is connected and the tap opened before washing clothes.

Intended use

- The washing machine is only domestic use and for the purposes for which it was designed.

Children's safety

- Electrical products are dangerous for children. Keep children away from the washing machine when it is in use. Use child lock to prevent children from tampering with the washing machine controls.
- Do not allow children to play on or in the machine. If a child accidentally falls into the wash/ spin tub, serious injury could occur. Close the lid when leaving the room where the machine is located.

  Keep children away from the washing machine and keep boxes or steps well away from the washing machine to prevent children from stepping up and accessing the controls, lid and wash tub of the washing machine.
- Do not allow children to sit on the washer.

Transportation of the machine

1. Unplug the machine before transporting it.
2. Remove water drain hose and water supply hose connections.
3. Drain all remaining water from the machine.

Electrical connection

- The washing machine must be earthed and the manufacturer and seller do not accept responsibility for any damage due to incorrect electrical connection.
- Connection must comply with national regulations.

Ensure that the power plug and power cord are properly connected.

- Never touch the plug with wet hands!
- Never unplug by pulling on the cable, always pull out by grabbing the plug.
- Do not operate a damaged washing machine.
- If the power cable is damaged, it must be replaced by the manufacturer, after sales service or a similarly qualified person.
- Never plug the washing machine into the wall socket during installation. Death or serious injury may result.
- For safety reasons, the wall socket and the plug should be accessible after installation.
- Do not make connections via extension cables or multi-plugs.
- Pull out the plug from the wall socket if the machine is not going to be used.

Things to be done for energy saving

- Always follow the instructions on the detergent packaging.
- Wash slightly soiled laundry at low temperatures.
- Use faster programmes for small quantities of lightly soiled laundry.

Preparation

	Preparation of location, electrical, tap water and waste water installations of the machine are the customer's responsibility.
	Ensure that the water inlet, discharge hoses and power cable are not folded, pinched or crushed, during or after installation or cleaning procedures.
	Warning: Prior to installation, visually check if the machine has any defects on it. If so, do not install it. A damaged machine is a safety risk.

Remove package

- Remove package and take out the bottom board of the cabinet on the foam cover.
- Open the washer door lid and take out the accessories.
- Never perform a trial operation or run the washing machine on the foamed cushion as this is extremely dangerous.

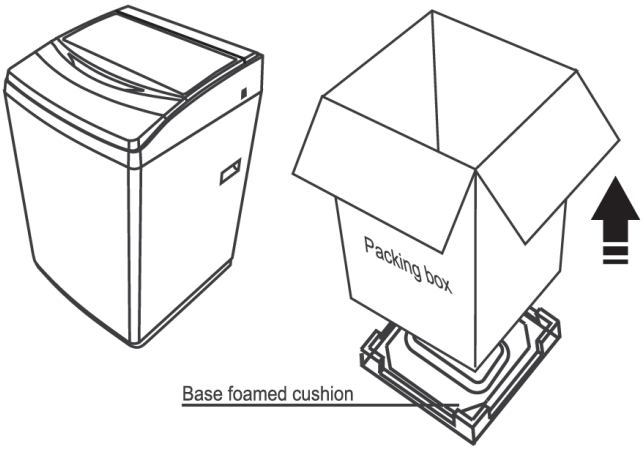

	Warning: Packaging materials are Dangerous to children. Keep packaging materials in a safe place away from the reach of children.

Before moving the machine, take note of **figure A** on how to carry the machine.

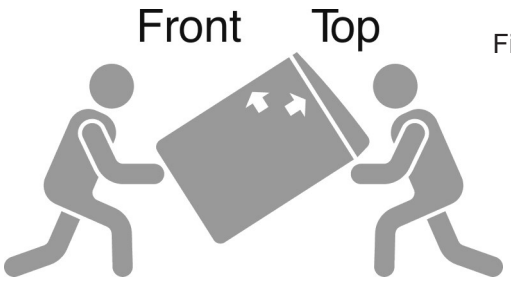

Figure **A**

Know your washing machine

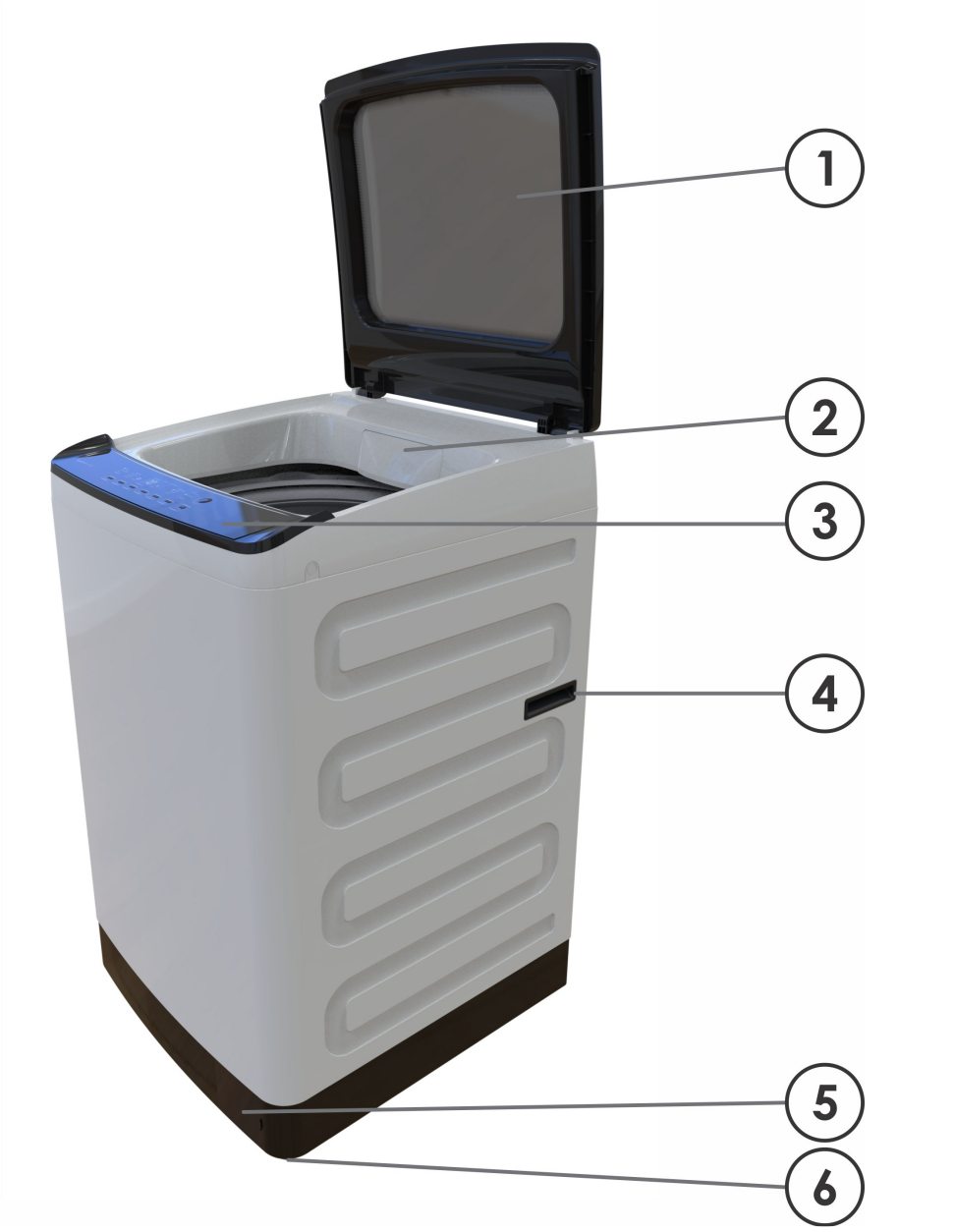

1- Loading door
2- Detergent drawer
3- Control panel
4- Carry handle
5- Filter cap
6- Adjustable feet

	The manufacturer strives for continuous improvement. For this reason, technical specifications, text and illustrations in this manual are subject to change without notice.
	Figures in this manual are schematic and may not match your machine exactly.
	Values stated on the machine labels or in the documentation accompanying it are obtained in laboratory conditions in accordance with the relevant standards. Depending on operational and environmental conditions of the machine, these values may vary.

Installation

Review information in the user manual and ensure that the electricity, water supply and water drainage systems are appropriate. If they are not, call a qualified technician and plumber to have any necessary arrangements carried out.

Appropriate installation location

- Place the machine on a rigid floor that has sufficient load carrying capacity.
- The machine height is only adjustable at the front. The machine needs to be orientated on a floor that is level on either side and the back is either level or higher than the front.
- Choose a well ventilated dry location out of direct sunlight.
- Do not place the machine on the power cable.
- Do not install the machine at places where the temperature may fall below 0ºC.
- Place the machine at least 10 mm away from the edges of other furniture.
- Hot and cold water taps should be located within 1 metre of the inlet valves.

Connecting the water supply

	The water supply pressure required to run the machine is between 1 to 10 bars (0 1 - 1 MPa). It is necessary to have 10 - 80 litres of water flowing from the fully open tap per minute in order to have your machine run smoothly. Attach a pressure reducing valve if the water pressure is higher.
	If you are going to use the double water inlet machine as a single (cold) water-inlet unit, install the supplied stopper to the hot water valve before operating the machine (Only applies to machines supplied with a blind stopper for closing off the hot water valve)

1. Connect the special hoses supplied with the machine to the water inlets on the machine. Red hose (left) (max hot water temperature for the machine is **60 °C**) is for hot water inlet, blue hose (right) (max **25 °C**) is for cold water inlet.

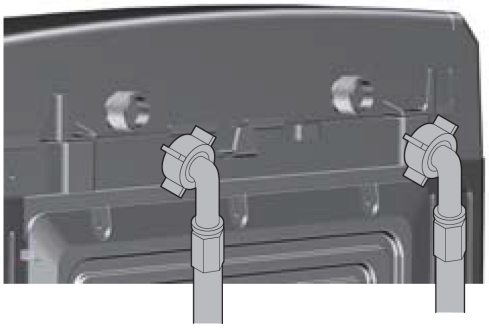

	Warning: Ensure that the cold and hot water connections are made correctly when installing the machine to prevent your laundry coming out hot at the end of the washing process and wearing out.

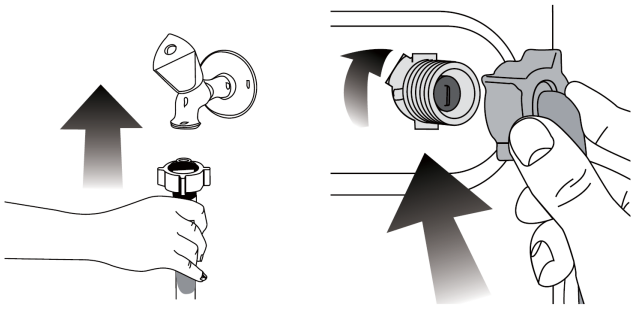

2. Tighten all hose nuts by hand. Never use a tool when tightening the nuts.
3. Open the taps completely after completing the hose connection to check for water leaks at the connection points. If any leaks occur, turn off the tap and remove the nut. Retighten the nut carefully after checking the seal. To prevent water leakages and damages caused by them, keep the taps closed when the machine is not in use.

Connecting to the drain

- The end of the drain hose must be directly connected to the wastewater drain or to the washbasin.

	Warning: Flooding will occur if the hose comes out of its housing during water discharge. There is risk of scalding due to high washing temperatures! To prevent this and to ensure smooth water intake and discharge of the machine, secure the end of the discharge hose tightly so that it cannot dislodge easily.

- The hose should be attached to a height of at least 65 cm, and 100 cm at most.
- In case the hose is elevated after laying it on the floor level or close to the ground (less than 65 cm above the ground), water discharge becomes more difficult and the laundry may come out excessively wet. Therefore follow the heights as per the following figure.

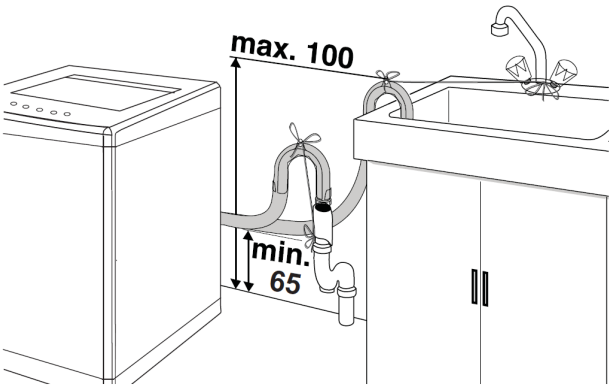

- To prevent flow of dirty water back into the machine and to allow for easy discharge, do not immerse the hose end into the dirty water or do not push it in the drain by more than 15 cm. If it is too long, cut it shorter.
- The end of the hose should not be bent, it should not be stepped on and the hose must not be pinched between the drain and the machine.
- If the length of the hose is too short, use it by adding an original extension hose. Length of the hose may not be longer than 3.2 m. To avoid water leakage, the connection between the extension hose and the drain hose of the machine must be properly fitted with an appropriate clamp so as not to come off and leak.

Rodent guard (Depends on model)
A rodent guard is not supplied with the machine. If required, a rodent guard may be purchased from Defy spares.

Placing the rodent guard on the machine:
To place the rodent guard on the machine, remove the screw as per the diagram below. Place the rodent guard in position then fasten the screw to secure the rodent guard in place.

Adjusting the feet

Adjust the feet so that the machine is level and balanced. A machine that is unlevelled will vibrate, generate excessive noise, damage the safety switch and may not complete the spin function.

Adjust the 2 adjustable legs of the machine by turning them either in a clockwise or anti clockwise direction.

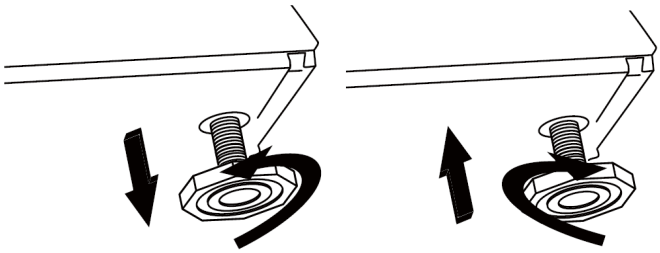

Transportation of the machine

1. Unplug the machine before transporting it.
2. Remove the water drain and water supply connections.
3. Drain all the water that has remained in the machine.
4. Fit the polystyrene and then package the machine.

Using detergent /softener and bleach

i	When using detergent, softener, starch, fabric dye, bleach or limescale remover please ensure you read the detergent manufacturer's instructions on the package carefully and follow the suggested dosage values. Use measuring cup if available.

Sorting the laundry

- Sort laundry according to type of fabric, colour and degree of soiling and allowable water temperature
- Always follow the instructions given on the garment tags

LAUNDRY WASH SYMBOLS

WASH	Machine Wash Symbols	Normal wash		No Iron		Sensitive-Delicate wash		Hand wash		Not washable	No Spin
	Water Temperatures	Maximum		95°C	70°C	60°C	50°C	40°C	30°C		
		Symbol(s)		●●● ●●●	●●● ●●	●● ●●	●●●	●●	●		
BLEACH		All bleaches are allowed				Bleach (sodium hypochlorite) can be used		Bleach is not allowed		Only bleaches without chlorine are allowed	

Preparation before initial use

Before first use of the machine, ensure that all preparations are made in accordance with the instructions in sections “Important safety instructions” and “Installation”.
To prepare the machine for washing laundry for the first time, perform a tub cleaning (maintenance wash) procedure as outlined in the main programme guide of this manual.

Preparation

- Close all zippers, snaps and hooks to prevent them from snagging other articles.
- Remove pins and hard items to prevent them from scratching the machine.
- Empty all pockets, remove all items in pockets such as coins, pens and paper clips, and turn pockets inside out and brush pockets. Such objects may damage the machine and cause noise.
- Put small size clothes in a laundry bag or pillow case.
- Place curtains in the wash tub without compressing them. Remove curtain attachment items.
- Turn down cuffs and turn synthetic knits inside out.
- Tie strings and sashes so they will not tangle.
- Treat spots and stains before washing.
- Tough stains must be treated properly before washing. If unsure, check with a dry cleaner.
- Use only dyes/colour changers and limescale removers suitable for machine wash. Always follow package instructions.
- Wash trousers and delicate laundry turned inside out.
- Keep laundry items made of Angora wool in the freezer for a few hours before washing. This will reduce pilling.
- Laundry that has been soiled with flour, lime dust, milk powder, etc. must be shaken off before placing into the machine. Dusts and powders on the laundry may build up on the inner parts of the machine in time and can cause damage.

Sorting

Mix large and small items in each load.
Separate heavily soiled items from lightly soiled ones.
Separate dark colours from light colours.
Separate colourfast items from non colourfast ones.
Separate robust fabrics from delicate.
Separate whites from coloured fabrics.

Load capacity
The load capacity depends on the type of laundry, the degree of soiling and the washing program. The machine automatically adjusts the amount of water according to the weight of the loaded laundry.

⚠	**WARNING:** Follow the information in the “Programme and consumption table”. When overloaded, there will be increased creasing and lint. The machine's washing performance will drop. Moreover, noise and vibration problems may occur.

Loading
1. Lift the washer lid.
2. Arrange the articles to be washed loosely round the perimeter of the tub.
3. Load evenly as an off balance load may cause unnecessary vibrations.
4. Close the lid and; Ensure that no items are caught in the lid.
5. Use a large load programme when washing permanent press garments. These items need more space to move.

Laundry type	Weight (g)
Bathrobe	1200
Napkin	100
Duvet cover	700
Bed Sheet	500
Pillowcase	200
Tablecloth	250
Towel	200
Hand towel	100
Evening gown	200
Underclothing	100
Men’s overalls	600
Men’s shirt	200
Men’s pajamas	500
Blouses	100

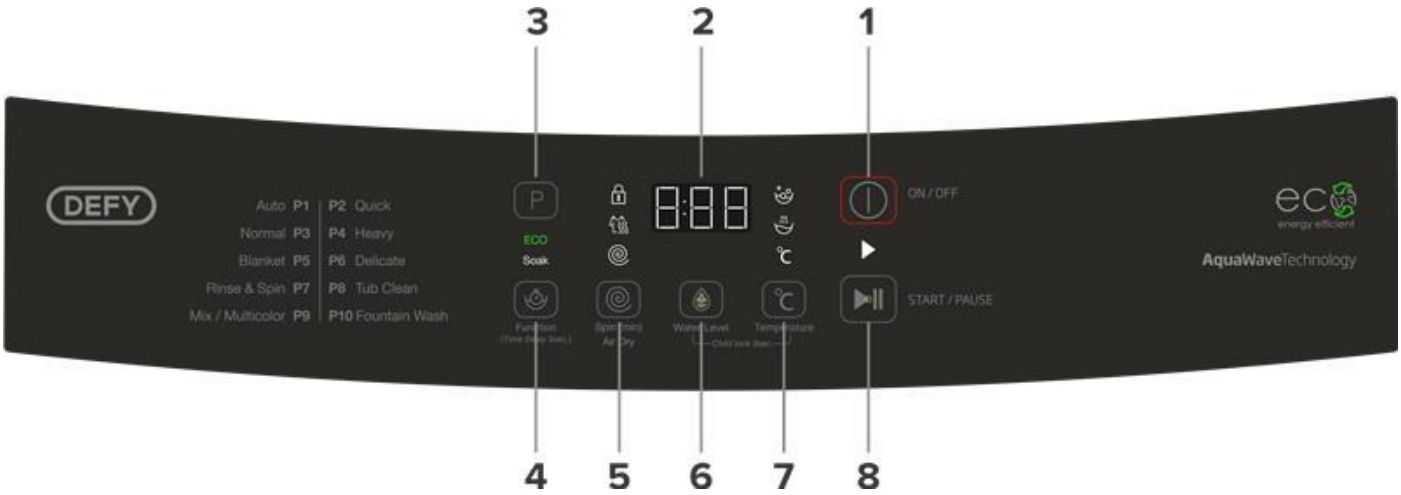

1 - On / Off Button
2 - Display
3 - Program Button
4 - Function Button
5 - Spin / Air Dry Button
6 - Water Level Button
7 - Temperature Selection Button
8 - Start / Pause Button

ℹ	During the spin process, if washing is piled to one side of the spin tub it will cause unbalance of the spin tub. The sensor will pick up the unbalance and will automatically correct it. If after 3 corrections the unbalance remains the auto correction cannot resolve the problem then the user must manually place the clothing evenly inside the tub to resolve the problem.

Operating the washing machine

Power Button

Press this button once to operate. Press again to switch the power off.

Start/Pause Button

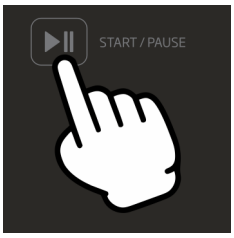

Use to pause and restart the operation. To change the washing procedure during an operation, press this button to stop and again to restart after changing the procedure.

Programme Select Button

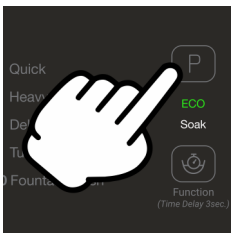

Each time the program select button is pressed, the washing programme changes.

Temperature Selection Button

Each time this button is pressed, the water temperature is selected The Display will show:
C: Cold
CH: Warm
H: Hot

Function Button

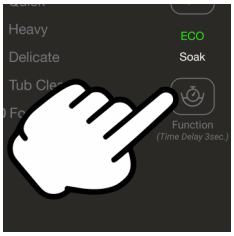

Each time the Function button is pressed, the function changes between **ECO** & **SOAK** modes.

Remaining Time, Delay Start Time, Error Display

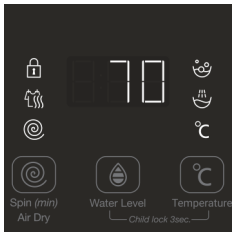

Displays remaining wash time, the reserved delay start time and the error code if a problem occurs in the washing machine. (See error codes).

Delay Start Time Button

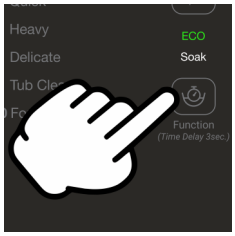

Adjusts delay start time up to a maximum of 18 hours.

<u>Press and Hold</u> **Function Button** for 3 seconds to adjust delay

Water Level Button

The water level is automatically adjusted. The water level can still be selected manually by pressing this button. Water Levels are available from 1~10. Please see Programme and Consumption Table

Spin / Air Dry Button

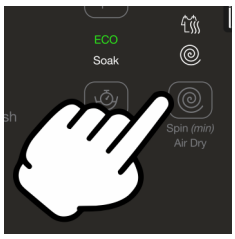

This is a separate spin programme and cannot be selected with other programmes. You can choose 0-3-6-9-30-60-90 (min) cycle times.

Child Lock

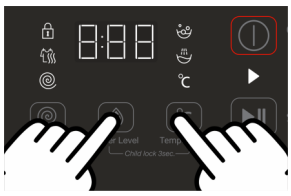

The child lock helps to protect children from being accidentally hurt should they be playing with the washer.

How to start the Child-Lock function:

Once the program is engaged, press the “Water level” button and “Temperature” button at the same time for 3 seconds. Should the child lock function be activated, the lock icon will light up next to the display

To deactivate the Child-Lock:

Press both the “Water Level” and “Temperature” buttons at the same time to deactivate.

Main programmes

Depending on the type of fabric, use the following main programmes.

Auto (P1)

This program selects the best water level and wash program automatically depending on the amount of laundry. Use this program for washing cotton and blended items.

Quick (P2)

This program is suitable for washing a light load of lightly/daily soiled cotton clothes in a short time. (Refer to program guide)

Normal (P3)

This program is suitable for washing a full load of normally soiled durable cotton and blended clothes.

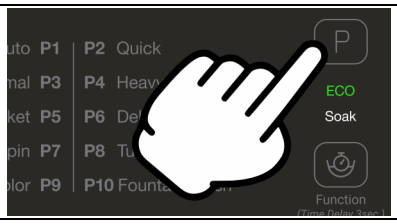

Heavy (P4)

This program is suitable for washing a full load of heavily soiled durable cotton and blended clothes. Soaking function is set automatically in this wash program. Hot water inlet valve will be activated if available with your model.

Blanket (P5)

This program is suitable for washing bulky laundry items such as blankets and bed sheets. Fold bulky items in a suitable manner before placing them in the washing machine. Do not overload. (Max 1/2 of full capacity).

Delicate (P6)

Use this program for washing machine washable delicate (cotton, blended and wool) items such as sweaters, jumpers, and cardigans. Hot water and soaking options cannot be selected in this program. We recommend using special purpose detergents suitable for washing delicate laundry. Light loads only. ((Max 1/3 of full capacity).

Rinse & spin (P7)

Use this program when you want to rinse or starch separately. Use this program to apply an additional spin cycle for your laundry or to drain the water in the machine.

Tub clean (P8)

Use this program once a month to sanitize and clean your machine and to prevent unwanted odours.

Do not place any items or laundry in the machine when you use this program, it must be operated when the washer is empty otherwise laundry or washer might be damaged.

Add a special purpose detergent suitable for cleaning machines.

Soaking, high water and 6 min air turbo options are set automatically in this program.

Auxiliary function selection

Mix / Multicolour (P9)

Fountain wash (P10)

This program is suitable for washing a light load of normally soiled cotton clothes. Through the innovative impeller structure and software design, produces fountain flow effect for better penetration and textile care.

Auxiliary function selection

Soak

Select this function if you like to wash your laundry by soaking. Soaking is recommended for heavily soiled laundry items. You can add the normal amount of detergent and start the wash program by selecting this function. Soaking is not selectable in Eco and Wool programs.

Eco

This program is suitable for washing a lesser amount of lightly/daily soiled laundry in a short time using minimum amount of water. (Max 1/3 of full capacity).

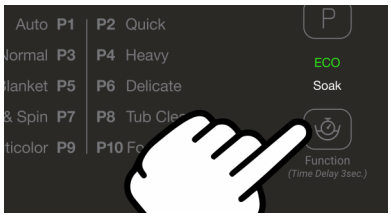

Symbols and functions

	Wash mode indicator	• Indicates the wash mode running.
	Rinse mode indicator	• Indicates the rinse mode running.
	Spin mode indicator	• Indicates the spin mode running.
	Remaining time, Delay time, Error display	• Displays remaining wash time, the reserved delay ending time and error codes.
°C	Temperature indicator	• During the washing process, the indicator light will be as follows: Cold = No light; Warm = Flashing light; Hot = constant light
	Child lock indicator	• Indicates the child lock status.
	Monsoon mode indicator	• Indicates the monsoon mode running with longer spin time than normal.

Programme and Consumption table

Programme	Max. Load (kg)	Water level		Temp			Wash Process (min)			Function			Time (min)
		Default	Available	C	CH	H	Wash	Rinse	Spin	ECO	Soak	Time Delay	
AUTO	Rated load	--	1~10	○	●	○	17	2	6	○	○	○	52-65
Quick	2	2	1~8	○	●	○	4	1	3	×	×	○	22
Normal	Rated load	8	1~10	○	●	○	17	2	6	○	○	○	65
Heavy	Rated load	8	1~10	○	●	○	22	3	9	×	○	○	89
Blanket	Rated load	10	1~10	○	●	○	20	2	9	×	○	○	71
Delicate	Rated load	6	1~10	●	○	×	10	2	3	×	×	○	52
Spin & Rinse	Rated load	8	1~10	●	×	×	×	2	6	×	×	○	41
Tub Clean	×	8	8	○	●	○	15	2	6	×	×	○	60
Mix/Multicolor	Rated load	7	1~10	●	○	○	14	2	6	×	○	○	62
Fountain Wash	4	4	1~6	○	●	○	13	2	6	×	○	○	58
Note: ● : Default ○ : Selectable × : Not optional													

Note:

- ECO is a separate programme
- Soak and Prewash can't be selected at the same time.
- Time mentioned in the table will be varying according to the conditions of water inlet pressure & water draining.

Technical specifications	
Model No.	DTL160
Height (mm)	990 mm
Width (mm)	600 mm
Depth (mm)	615 mm
Net weight (Kg)	43
Spin Speed (rpm)	750
Rated voltage (V/Hz)	220–240V~50Hz
Total current (A)	1.8
Total power (W)	350-390W
Inner Tub	Stainless Steel
Display	LED Display
Colour	Silver

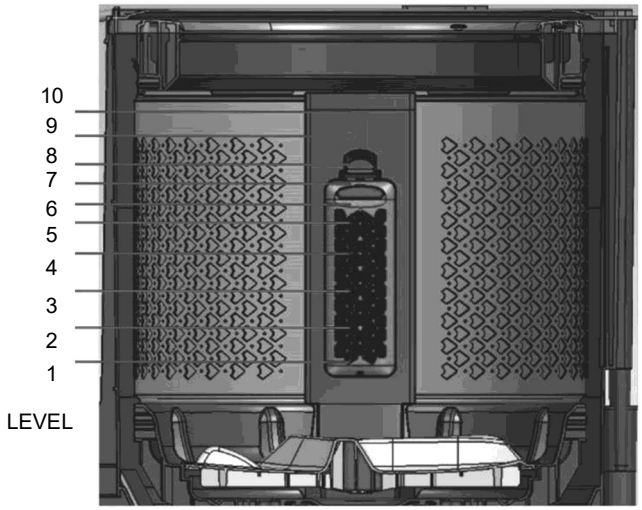

Disposing of the washing machine

- This washing machine has been manufactured with high quality parts and materials which can be reused and are suitable for recycling.
- Do not dispose of the machine with normal domestic waste at the end of its service life. Please consult with your local authorities.
- Should you at any time in the future scrap the washing machine, cut the power cord and take measures to render the door inoperative thereby preventing children, when playing, getting trapped inside.

Maintenance and cleaning

If cleaned at regular intervals, the service life of the machine will be extended and frequently faced problems will decrease.

Cleaning the detergent drawer

Pull detergent drawer towards yourself. Turn detergent drawer upwards, and pull drawer out. Clean detergent drawer with water. Follow the instructions on cleaning the detergent drawer.

Clean the detergent drawer every 4-5 washing cycles to prevent the accumulation of powder detergent over time. Wash the detergent drawer with plenty of lukewarm water in a wash basin. Wear protective gloves or use an appropriate brush to avoid skin contact with the residues in the drawer whilst cleaning. Insert the drawer back into its place after cleaning and ensure that it is properly seated.

Cleaning the body and control panel

Wipe the body of the machine with soapy water or non-corrosive mild gel detergents as necessary, and dry with a soft cloth. Use only a soft and damp cloth to clean the control panel.

Since the following are not factory faults they are the owners responsibility:

Damage to the exterior finish, breakage of components, damage through improper use or installation of the washing machine or damage caused by moving the washing machine.

Before calling a Service technician or your dealer, please check the following:

- Is the machine plugged into the wall socket? Is the house circuit breaker on?
- Is the machine switched on? Has the washer lid been closed properly?
- Check if the machine is level.
- Is the detergent dose correct? Is the filter clean? Is the tap open?
- Is there a water supply to the home? Have any of the hoses been twisted or kinked?

Cleaning the water intake filters

There is a filter at the end of each water intake valve at the rear of the machine. These filters prevent foreign substances and dirt in the water from entering the washing machine. Filters should be cleaned as they do get dirty.

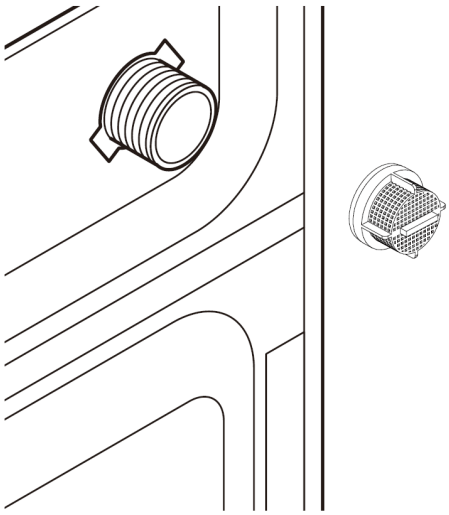

1. Close the taps.
2. Remove the nuts of the water intake hoses to access the filters on the water intake valves. Clean them with an appropriate brush.
3. If the filters are very dirty, take them out with the aid of pliers and clean the filters.

Draining remaining water and cleaning the pump filter

The filter system in your machine prevents solid items such as buttons, coins and fabric fibres clogging the pump impeller during discharge of washing water. This ensures easy water discharge and the service life of the pump will be extended.

If the machine fails to drain water, the pump filter is clogged. The filter must be cleaned whenever it is clogged or once every 3 months.

Water must be drained off first to clean the pump filter. In addition, prior to transporting the machine (e.g., when moving to another house) and in case of freezing of the water, water may have to be drained completely.

⚠	**Warning:** Foreign substances left in the pump filter may damage the machine or may cause a noise problem.

In order to clean the dirty filter and discharge the water:

1. Unplug the machine to cut off the power supply.

⚠	**Warning:** Temperature of the water inside the machine may rise up to 90ºC. To avoid a scalding risk, the filter must be cleaned after the water in the machine cools down.

2. Open the filter cap.
If the filter cap is composed of two pieces, press the tab on the filter cap downwards and pull the piece out towards yourself.
3. Only some models are fitted with an emergency draining hose. Follow the steps below to discharge the water if your machine is not fitted with an emergency drain hose.

Discharging the water when the machine does not have an emergency draining hose:

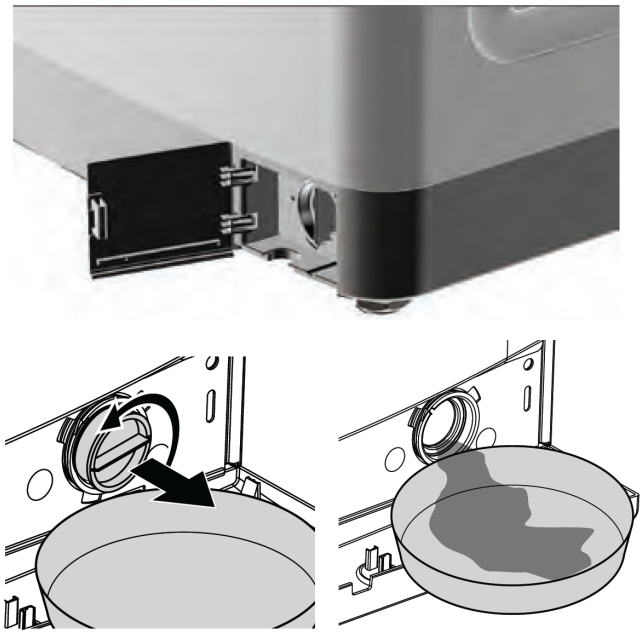

a. Place a large container in front of the filter to catch water from the filter.
b. Loosen pump filter (anticlockwise) until water starts to flow. Fill the flowing water into the container you have placed in front of the filter. Always keep a piece of cloth handy to absorb any spilled water.
c. When the water inside the machine is finished, take out the filter completely by turning it.
4. Clean any residues inside the filter as well as fibres, if any, around the pump impeller region.
5. Install the filter.
6. If the filter cap is composed of two pieces, close the filter cap by pressing on the tab. If it is one piece, seat the tabs in the lower part into their places first, and then press the upper part to close.

Cleaning the fuzz collector

1 Push to take filter out

2.Open the filter and clean. Keep the filter rubber in the original position.

3. After cleaning assemble the filter on the right position.

Troubleshooting

Problem	Where to Check
There is no power.	*Check whether there has been a power failure.* *Check whether there is blown fuse or tripped circuit breaker.* *Check that the power cord is securely plugged in.*
The machine does not work.	*Is the washer lid open? Close the lid.* *Is the Pause button on? Press the START/PAUSE button one more time and check if the washer starts.* *Has the water filled to the water level?* *If the water pressure is low it may take a long time before washing starts.* *Is the tap closed? Open the water supply tap.*
The drain hose and spin basket have frozen up.	*Add hot water to the frozen water tap and remove the drain hose. Soak in hot water.* *Pour hot water into the spin basket and leave in for approximately 10 minutes.* *Place a hot water towel on the drain hose connector.* *When the drain hose defrosts, connect again and check for proper water draining.*
The water drains out immediately.	*The drain is clogged with coins or pins.* *Check that the drain hose is not below 65 cm.* *Half fill the spin basket with water and try spinning again.*
The water leaks at the water supply hose connector.	*If the tap connecting part is loose, water may leak.* *Repeat the assembly steps again. (Refer to "Connecting the water supply hose").* *Check if the rubber seal on the water supply hose is in the correct position. Screw tightly again.* *Is the water supply hose kinked? Straighten the hose.* *If the water supply is too strong, water may leak. Close the tap a little.* *Is water leaking from the tap itself? Fix the tap.*
Water is not supplied.	*Was the Start/Pause button pressed after selecting the water supply? If the Start/Pause button is not pressed, water is not supplied. Press the Start/Pause button.* *Check whether the water supply tap is open.* *Is the filter net at the water supply hose connector clogged? Clean the filter net by brushing with a toothbrush.* *Is the water supply cut off? If so, switch off the tap and power off the washer.* *Check to see that the water pressure is not too low.*
Spinning makes loud noises and vibrations.	*Check if the laundry is spread evenly in the washer. Spread out the laundry evenly and start again.* *Is the washing machine level on a sturdy flat floor. Set the machine level.* *Adjust the legs on the feet and ensure they are level.* *Is the area around the washing machine cluttered with objects?* *Remove unnecessary objects away from the wash machine.*
Water does not drain.	*Check that the height of the drain hose is not over 100 cm.* *Check that the drain hose is not kinked or obstructed.* *Check to see if the water outlet is clogged.*
The machine does not spin.	*Check to see that the laundry is evenly distributed and that it has not clumped on one side of the wash/spin tub.* *Check whether the washer is on a level surface. Close the washer lid. Ensure the lid is not being obstructed from closing.*
Other problems.	*Press the POWER ON/OFF button to switch off the power.* *Call the customer care line on 086 100 3339.*

Error codes

Error Code in Display	Error Description	What to Check
E1	Water intake is very slow	Is the water tap shut? Is the water supply cut? Is the tap or water supply hose frozen? Is the water pressure low or is the filter of the inlet valve clogged with impurities? Is the hot hose connected to cold? Is the cold hose connected to hot?
E2	Water drainage is very slow	Is the drain hose positioned correctly? Is the drain hose bent or placed too high? Is the internal part of the hose or drain pump (only for pump model) clogged with impurities? Check whether there has been a power failure.
E3	Unbalance	Check to see that the laundry is evenly distributed and that it has not clumped on one side of the wash/spin tub. Check whether the washer is on a level surface.
E4	Overflow	Call your nearest service agent or your dealer.
E5	Pressure sensor frequency out of range	Call your nearest service agent or your dealer.
E8	Communication failure	Call your nearest service agent or your dealer.
Ec	Zero-cross detection failure	Call your nearest service agent or your dealer.
Ed*	Heating system failure	Call your nearest service agent or your dealer.
EE*	Mechanical door lock system failure	Is the lock broken? Did you force open the door? Call your nearest service agent or your dealer.
EF*	Inverter failure	Call your nearest service agent or your dealer.
EA	Motor drive TRIAC is broken.	Call your nearest service agent or your dealer.
Warning		
Hi-Lo	Power supply out of range	Is the electric supply too low or too high? Voltage Range in your home must be between 135~320V

NOTE: The time it takes to display an error code vary between 6-10 minute.

*** Model Dependent Errors**

⚠	**Warning:** If the problem cannot be eliminated, even after the instructions have been followed, contact the customer care line on 086 100 3339. Never try to repair a non functional machine yourself.

Defy customer care call centre

If you have followed the instructions and still have a problem or have any service or spares queries, please contact the customer care line by sending an email to **service@defy.co.za** or by calling **0861 00 3339**. They will be able to advise you on any aspect of the appliance.

Defy Sub-Saharan Africa Branch contact details

ZAMBIA: SOUTHGATE INVESTMENTS LTD
Plot 1606, Sheki Sheki Road
P.O. Box 33681
Lusaka, 10101, Zambia
Tel: +260 0211 242332/3
Fax: +260 0211 242933
defyservicecenter@outlook.com

NAMIBIA: ATLANTIC DISTRIBUTORS (PTY) LTD
10 Tienie Louw Street, Northern Industrial Area
P.O. Box 21158, Windhoek, Namibia
Tel: (061) 216162
Fax: (061) 216134
atlantic@mweb.com.na

ZIMBABWE: TRADE COM AFRICA
Trade Com Africa, 183 Loreley Crescent
Msasa, Harare, Zimbabwe
Tel: +00263 773 438001
servicecentre@tradecomafrica.com

BOTSWANA: RAY MORGAN AGENCIES
RMA Service Centre, Plot 48, East Gate
Gaborone International Commerce Park
Kgale View, Gaborone
Botswana
Tel: +267 390 3996 / 390 3912
Fax: +267 318 7376
Cell: +267 7134 6539
service@rma.co.bw

SWAZILAND: LYNDS DISTRIBUTORS
P.O Box 716, Mbabane, Swaziland, H100
Tel: (00268) 2515 4310/8
Fax: (00268) 2518 4318
workshop@hoageys.co.sz

MOZAMBIQUE: COOL WORLD. LDA
Rua da Resistencia No. 97B R/C
Cell: +258 84 44 61 234
mdwholesale@mweb.co.za
Nosso Show Room
Av: da Industrias, Parcela No.735 * 735A
Machava, Maputo

Warranty

This certificate is issued by DEFY APPLIANCES (PTY) LIMITED manufacturers of Defy and Ocean products, hereinafter the Company, to the original purchaser only, of the appliance described on the certificate and shall constitute the only warranty given in respect of this appliance.

The Company warrants to the original purchaser that for a period of TWO YEARS from date of purchase the appliance is free from defect under normal domestic use, both in workmanship and material, subject to the following conditions.

1. Repair or replacement of any part of this appliance, found by the Company to be defective, shall be at the election of the Company. The Company reserves the right to effect such service through any of its Service Divisions or Authorised Service Dealers. The cost of such service shall be borne by the Company in full, provided that the appliance is located no further than 50km from a Company Service Centre or an Authorised Service Dealer. Where the appliance is located beyond the 50km radius, the purchaser shall be liable for the standard travelling charges, as determined by the Company.

2. Cracked, rusted or corroded solid plates, vitreous enamelware, rust, cosmetic wear or cosmetic/external damage to products/components/fuses and lamps are specifically excluded from these warranties. It is an express condition of these warranties that the purchaser takes due care and attention in the use and maintenance of the appliance. Abuse, misuse in conflict with operating instructions, connection to incorrect voltages and subjection to commercial use shall release the Company from its obligations.

3. This warranty shall become void and cease to operate if the appliance is dismantled by, or any repairs to the appliance are effected by any persons not duly authorised by the Company, or if substitute parts not approved by the Company are used in the appliance, or if the serial number of the appliance is removed.

4. The Company shall not be responsible for damages resulting from fire, flood, civil disturbances or any Act of God. The Company shall not, in terms of these warranties be responsible nor held liable for any consequential loss or damage of any kind caused by or due to the failure or malfunction of the appliance. The Company shall not be responsible for damages caused by insect and/or animal infestation.

5. The Company shall not be responsible for transportation or other costs other than those incurred within the provisions of Point 1 of this Certificate.

6. For warranties in the Republic of South Africa and Sub-Saharan Africa, please contact the customer care line. Please refer to the previous page for South African and Sub-Saharan African contact details.

7. Where service is requested under warranty and no fault or defect can be found by the Company, all costs incurred will be for the purchaser's account.

8. This Certificate as well as your invoice will serve as proof of purchase. For the purpose of warranty, it will be essential to produce this Certificate and invoice. Failure to do so, will render the purchaser liable for service costs.

KEEP THIS CERTIFICATE AND SALES INVOICE AS PROOF OF PURCHASE FOR WARRANTY PURPOSES.